ITEM	PART NO.	DESCRIPTION	QTY.
1	250400-17	MOUNT PLATE CAM DRIVEN BBC-TALL	1
2	250400-01	HOLDER SYNC PICKUP-SLOTS	1
3	250400-05	CAM SYN MAGNET RING	1
4	356810-06	10-32 x 0.375 FHCS	3
5	300209-03	HEX ADPT .50 LONG .625 MALE TO .375 FEMALE	1
6	250400-11	BBC CAM HUB FOR JESEL	1
7	354810-18	SPACER .25 x .50 x 1.15	6
8	250400-07	WASHER SPROCKET RETAINING	1
9	352510-04	1/4 X 0.60 NAS WASHER	8
10	356325-40	1/4-20 X 2.50 12PT	6
11	356325-10	1/4-20 X 0.625 12PT	2
12	359910-01	CRANK TRIGGER MAGNET	1
13	356231-12	5/16-24 X 0.75 12PT	3
14	356331-16	5/16-18 X 1.0 12PT	3

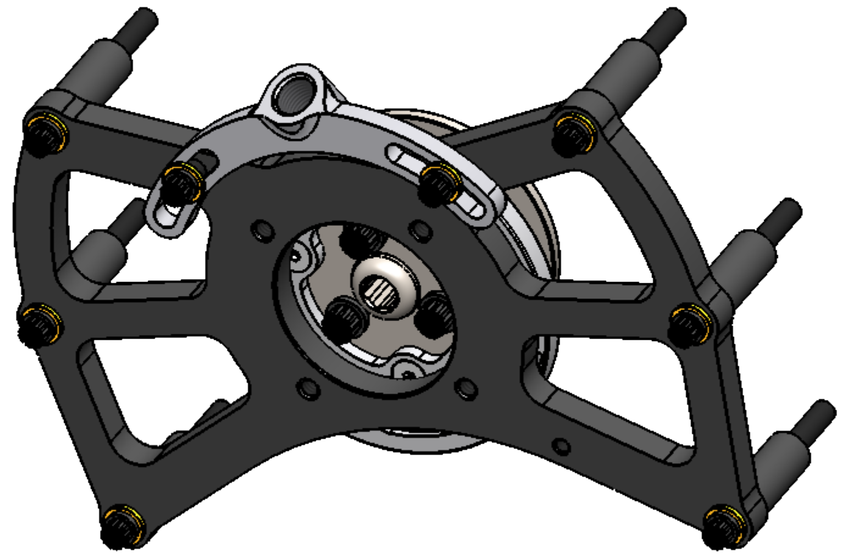

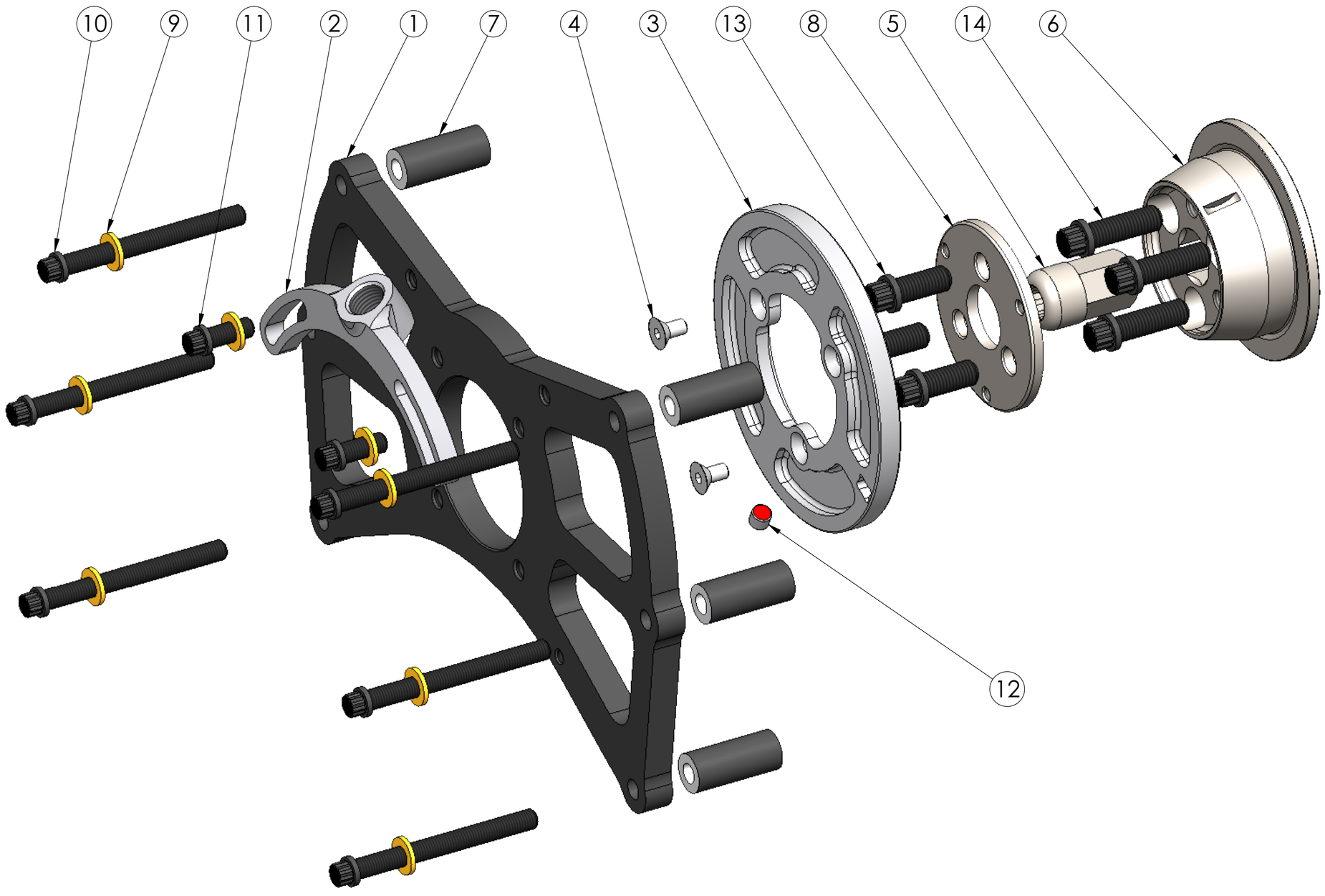

RCD
ENGINEERING INCORPORATED
TEL: 530-292-3133 - FAX: 530-292-3738

BBC TALL MOUNT PLATE W-CAM HUB & SYNC JESEL BELT DRIVE

PART. NO. 250400-0013 | C | SHEET 1 OF 1